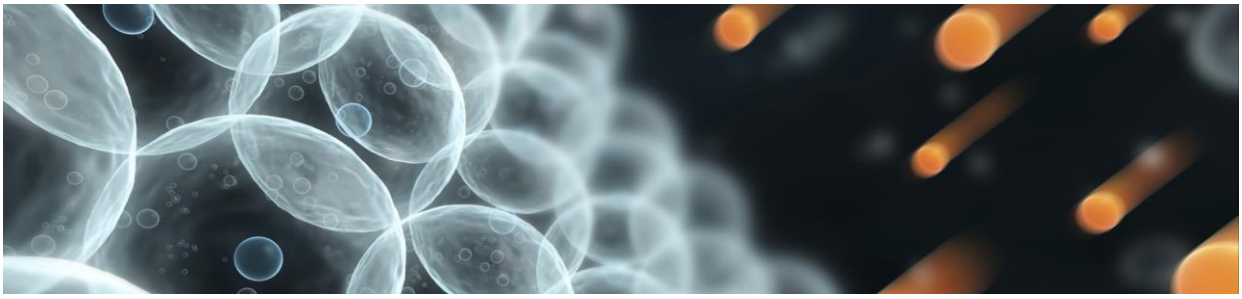

CMS OPTIPERM™ MEMBRANE

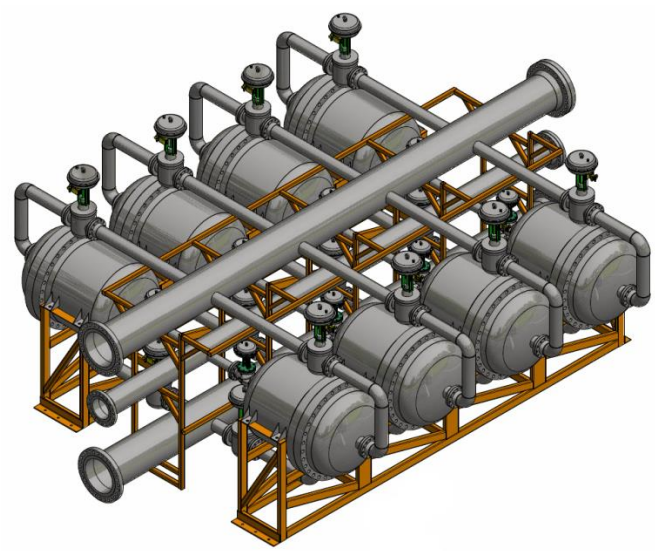

A BREAKTHROUGH INNOVATION FOR THE SEPARATION OF OLEFINS AND PARAFFINS

Executive Summary

Olefins are the building blocks for numerous chemicals including polypropylene and polyethylene, two of the most ubiquitous materials in our day to day life. *(The olefins industry in the United States is a $300 Bn market)*. To use olefins in the production of these chemicals, they must first be separated from their chemical siblings, paraffins, in a process that is currently energy-intensive as well as capital-intensive due to the chemical similarity of these molecules.

CMS has developed the Optiperm™ membrane, a technology to allow modular separation of olefins and paraffins. Optiperm™ uses a technique called facilitated transport to pass olefins across a membrane while leaving the paraffins behind. This is in contrast to the incumbent technology, distillation, which uses heat to separate the molecules through their thermal properties.

This innovative technology has the potential to disrupt the oil refining and petrochemical industries. Due to the modular nature of membranes, **it is now possible to separate olefins where and when you need to**. Olefins hiding in waste streams can be recovered. Capacity expansions of 10%, 20% or 30% can be achieved without having to install an entire distillation column. And small modular membrane systems coupled with existing distillation columns provide a lower cost option for process debottlenecking.

Keep reading to learn more about the exciting new technology, Optiperm™ membranes

Background

Compact Membrane Systems (CMS) is a 24-year old membrane company that originally spun off from DuPont in 1993. CMS develops fluoropolymer membranes for difficult separations in industrial gas and liquid applications. These membranes have been used in transformers, wind turbines, marine propulsion systems, pharmaceutical manufacturing, and bulk gasoline storage. Since 2011 CMS has focused its efforts on the development of an innovative membrane, Optiperm™, that selectively permeates light olefins. Over these six years, work in the lab combined with input from potential end users has generated a robust, practical membrane. In-depth, customer-vetted economic analyses conclude that systems with these membranes are economically attractive in a number of applications. These include propylene recovery from C3 splitter bottoms and polymerization reactor purge streams.

Membrane Technology

CMS Optiperm™ membranes are based on a silver-containing fluoropolymer material. The technology exploits a mass-transfer mechanism known as facilitated transport. Silver incorporated into the membrane polymer acts as a bonding site for the double bond in the olefins transporting them across the membrane. Saturated paraffins do not have the same interaction. This difference in affinity allows for olefins to pass through the membrane at a significantly higher rate than do paraffins.

The two key membrane properties that characterize the effects of facilitated transport are **permeance** and **selectivity**.

- **Permeance** is defined as the rate at which one component travels through a given surface area of membrane for a given driving force. This performance metric is typically expressed in GPU (gas permeation unit). Optiperm™ membranes have olefin permeance greater than 150. This translates into a propylene flux of 0.25-0.85 ton/ft^2/year under normal operating conditions (e.g., 30-200 psig, 30°C (86°F), and 20-90% olefin)
- The **selectivity** of one component to another is simply the ratio of the permeance of the two components. This tells you how much olefin is passing through the membrane as compared to paraffin. Optiperm™ has selectivity ranging from 20-80 depending on the operating conditions and feed composition

The Optiperm™ membrane has both high permeance and high selectivity, meaning high purities can be reached with a reasonable membrane area. These characteristics yield very attractive process economics.

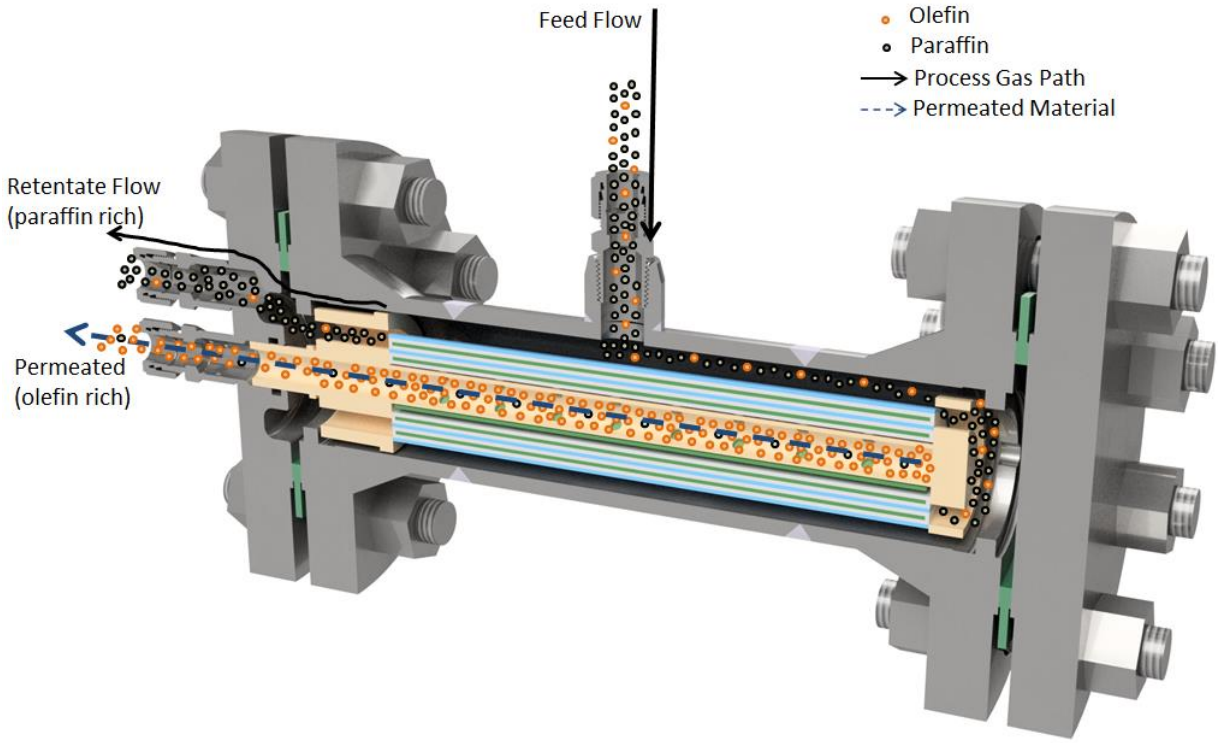

The membrane can perform separations of olefins from paraffins at a wide range of temperatures, pressures, and compositions. CMS has demonstrated olefin removal at temperatures up to 70°C (158°F) and pressures up to 250 psig. For an efficient separation to occur, the olefin-paraffin mixture must be in the gaseous state and saturated, as water vapor improves the mobility of the olefin through the membrane. The membrane can separate olefin in both concentrated and dilute streams for compositions ranging 5-95% by volume of olefin. The membrane can process mixtures of C2, C3, and C4 olefin and paraffin. Typical lab evaluations involve exposing the membrane to a stream of fixed pressure, temperature, and composition. The chart displayed on the next page shows a performance profile for a membrane separating a 20% propylene/80% propane mixture at 60 psig and room temperature. As you can see, the membrane has shown stable performance over >9 months, a vast improvement over current state of the art materials.

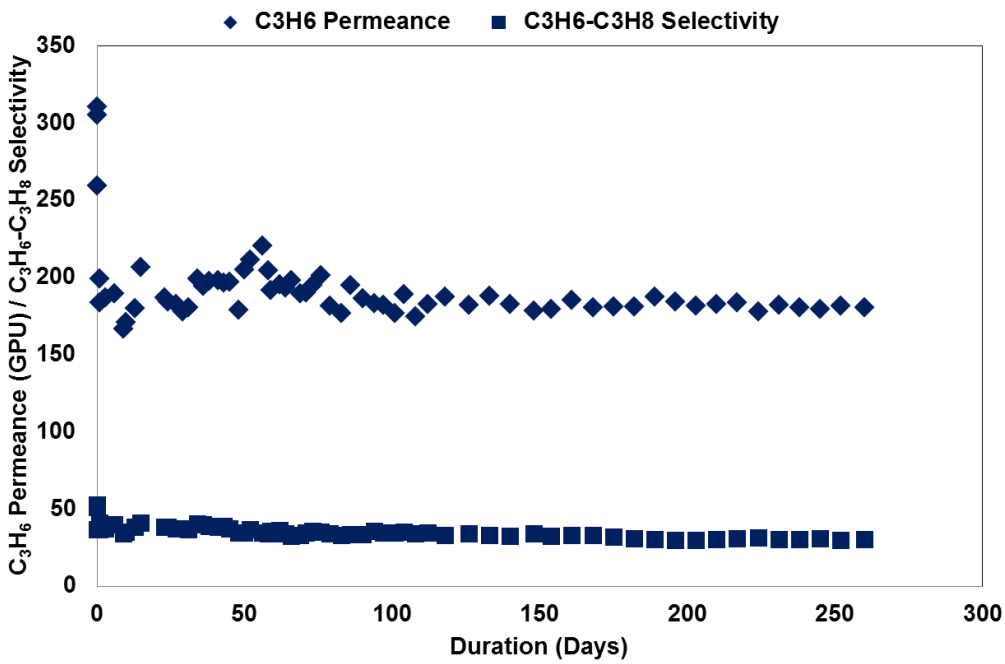

A broad range of tests have been conducted to characterize the membrane resistance to common poisons in refinery gas streams. Our membranes are designed to be poison-resistant so process upsets will not be catastrophic to membrane performance. Based on our testing, we recommend process streams contain:

1. <100 ppm acetylene
2. <2% hydrogen
3. <100 ppb total sulfur

We generally include feed conditioning (sulfur pretreatment) as part of the full membrane upgrading system to eliminate the concern that sulfur will detrimentally affect membrane lifetime.

Economics

CMS has performed multiple evaluations to assess the economic viability of the Optiperm™ membrane. These exercises rigorously examine the operational, capital, administrative, and associated auxiliary equipment (e.g. compression and drying) to return a pressurized, dry product or recycle stream. The assessments look at a representative process and use the membrane to add value by recovering olefin, purifying a paraffin rich stream and creating an olefin-rich stream. The two example target

applications included here are propylene recovery from C3 splitter bottoms and propylene recovery from polymerization reactors.

Application 1 – C3 Splitter

C3 splitters are used to separate C3 olefin (propylene) from C3 paraffin (propane). Depending on the conditions at which the column is operating, olefins are often spilled out the bottom in concentrations ranging from 1-20% of the stream. Those olefins are sold at a much lower value as propane or used as fuel. Using a membrane to recover the olefins can provide significant value to the producer.

The Optiperm™ membrane can be used to recover that propylene while also upgrading the propane to a higher purity. In this example, we've assumed a moderate amount of olefin in the C3 splitter bottoms (10%) and are using the membrane to produce an HD5 quality propane and permeate a propylene rich stream which can be sold as RGP, CGP, or PGP. Alternatively, it can simply be returned to the column to expand capacity. The evaluation here assesses the latter where the concentrated propylene is recycled to the splitter. A simple process flow diagram of the arrangement is shown on the next page.

The proposed system augments a 40,000 ton per year C3 splitter operating at 215 psig pressure. The system with standard membranes replaced every 2 years provides

- 16 month payback time
- IRR of 80%

These economics are robust over a wide range of conditions. The sensitivity analysis for a number of variables is shown on the next page. The principal sensitivity to the economics comes from the permeance of the membrane and the value of the stream. Higher permeance through the membrane minimizes the required area for the separation and therefore reduces the capital cost for the project. CMS Optiperm™ membranes have very high permeances, contributing to positive economic outcomes across a wide variety of applications.

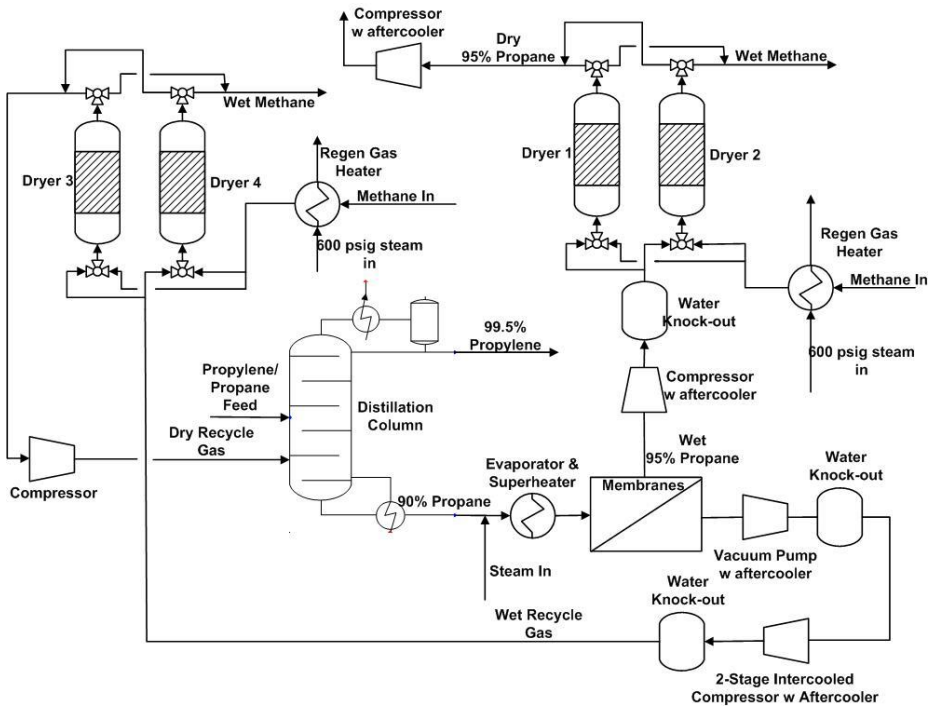

Process Flow Diagram: C3= Recovery from Splitter Bottoms Stream

As expected, more frequent membrane replacement, lower olefin permeance, and lower market value of propane and propylene increase the payback period of the membrane system. However, in all cases evaluated across a range of likely scenarios, the investment is still strongly positive with the IRR remaining greater than 48%.

Application 2 – Polymerization Reactor Propylene Recovery

This second application recovers propylene that is typically lost to a purge stream meant to prevent buildup of inert propane in a polypropylene reactor. As in the first case the recovered propylene can be sold outright or recycled to the process to increase capacity without purchasing additional feedstock. The membrane system in the scheme on the following page is added onto a 31,500 ton per year polypropylene reactor operating at 240 psig with a 10% propane/90% propylene feed. A system supplied with standard Optiperm™ membranes replaced every two years

- pays for itself in under 4 months and
- yields an internal rate of return over 300%.

These economics are very favorable and a similar sensitivity analysis to the previous case shows that the membrane lifetime and prices of the corresponding value streams are

the largest driver to the economics. Again, the IRR remains greater than 150% in all reasonable scenarios.

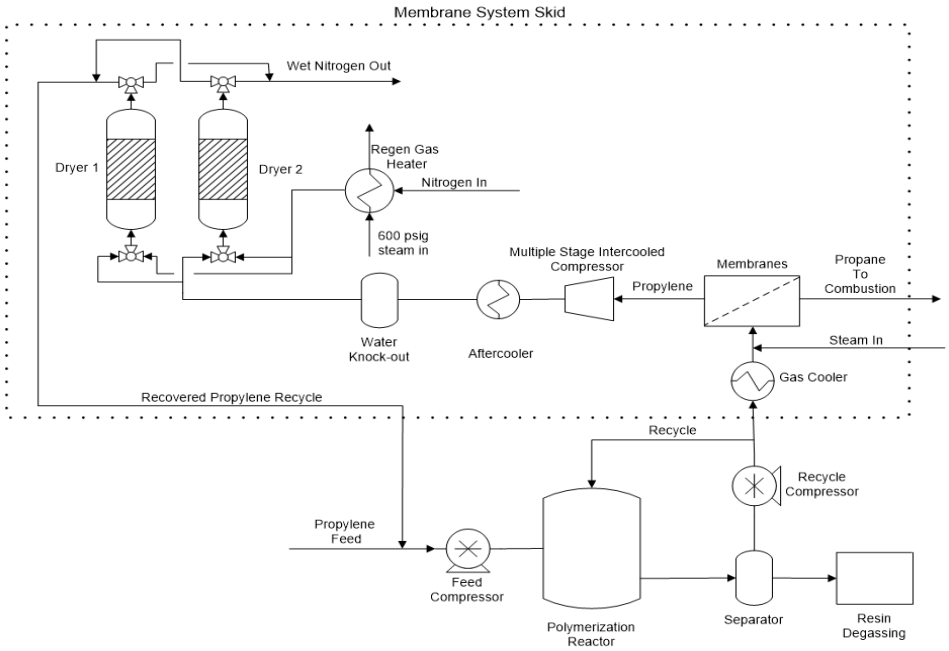

Process Flow Diagram: C3= Recovery from Polypropylene Reactor Purge Stream

Membrane Production Capabilities

CMS is currently scaling up manufacturing to meet expected demand. These scale-up activities include membrane module scale-up, supply-chain diversification, QC development, procurement of large scale coating equipment and expansion of manufacturing space. This work will allow CMS to be producing its Optiperm™ membrane at significant quantities by 4Q 2017.

Commercial Developments

We are working with numerous players in oil and gas and petrochemical industries. Several interested parties have requested on-site evaluation of the Optiperm™ membrane. Our relationship with Delaware City Refining Company (DCRC) has led to a scheduled pilot system launch in May of 2017. The unit will provide real-world evidence of membrane stability in realistic conditions validating our laboratory testing. Overall the project will confirm the technical and economic viability of a full scale system. Tests will be conducted over 6 months during which time the skid will operate autonomously save for regular sampling and maintenance. The full system is shown on the next page.

CMS is working with many other organizations on economic analyses and pilot and demonstration system developments. If you are interested in the Optiperm™ membrane technology, CMS will work with you to:

- Perform technical and economic modeling for a pilot or full-sized Optiperm™ membrane system
- Design a demonstration system for your stream of choice

In the past year CMS was recognized for its developments in olefin paraffin separations. At the 2016 Innovation Awards, organized by ICIS, CMS was named the overall winner beating out other semifinalists such as Dow, AkzoNobel, and Covestra. The panel of six industry innovation experts stated the technology "has huge potential and shows that there is still potential to innovate deep in the heart of the petrochemical value chain". Sudip Majumdar, the CTO of CMS, received the Innovator of the Year Award as well for his leadership in the development of the Optiperm™ membrane. CMS's achievement marked the first time in the award's 13 year history that the overall winner was an SME.


Membrane innovation earns top accolade

A strong shortlist proved a challenge when it came to deciding the category and overall winners this year. Six companies have been recognised in all, with Compact Membrane Systems taking the overall top slot. Three individuals have been chosen to receive awards in the inaugural Alpha Innovator of the Year categories

ICIS

INNOVATION AWARDS 2016

REWARDING EXCELLENCE

MEMBRANE SYSTEM A GREAT LEAP FORWARD

The overall winner this year is a start-up with great potential. Full details of all 2016 winners inside

Pilot test rig for olefin-paraffin separation

Full-Scale System

As developments with interested parties progress CMS has looked forward to design full-size membrane systems for use at a refinery or petrochemical facility. Some key features of a full scale system include:

- Modular design to reduce erection time and cost
- Operation and maintenance friendly skid mounted equipment
- Feed conditioning to lower incidence of membrane fouling
- Ability to isolate individual membrane housings for online maintenance
- Bundling of multiple membranes into one housing to reduce footprint

An example system was developed for a high capacity C3 splitter. The splitter generates 57,500 ton/year of paraffin rich bottoms with an average composition of 90% propane. A membrane system is used to recover olefin from this bottoms stream. The system recycles 4,700 ton/year of permeated material to the column, enriched in propylene to 64%. The system simultaneously yields 52,750 ton/year of HD5 propane. The planned membrane bank for this application contains 8 housings, each holding 42 membrane cartridges providing a compact footprint of 28′ by 28′, or 784 ft^2. In the projected design the membrane and housings are oriented horizontally, vertical orientation and stacking of housings can both be implemented to reduce the overall footprint of the full scale system.

The example system includes equipment for drying and recompression of the effluent streams. The drying step removes water before the material is recycled to the splitter or sent to storage. Drying is accomplished with two sets of pressure swing dryers regenerated with methane. The first set dries the HD5 product to specification while the second dries the recycle propylene rich stream to prevent water accumulation in the column. Recompression and condensing returns both the propylene rich permeate and HD5 propane streams to a liquid phase at operating pressures for return to the column, or product storage. Recompression is achieved via three compressors each coupled with after-coolers. The system is shown below by itself and next to the splitter for scale.

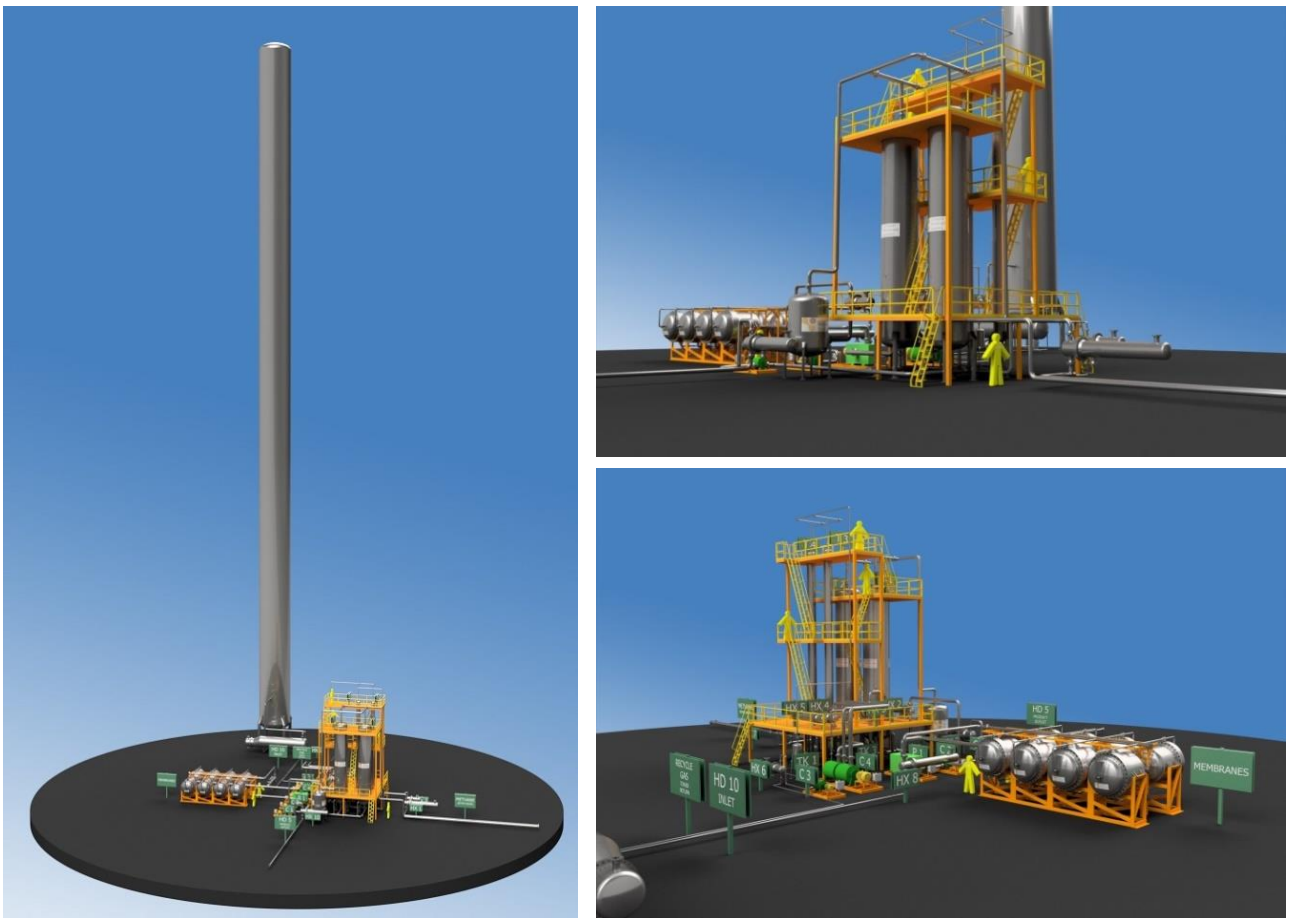

Example system for producing HD5 propane from C3 splitter bottoms

Financial Support Acknowledgement

None of this work would be possible without the ongoing support and backing by the Department of Energy. Their initial and continued funding of this innovative work drove the development and optimization of the technology. These grants include a Phase I, Phase II, and Phase IIB SBIR grant under DE-SC0007510.

In addition to support from the Department of Energy, we gratefully acknowledge the state of Delaware who has provided support in the form of a Bridge grant.

Upcoming Conferences

CMS plans to present its work with the Optiperm™ membrane at multiple conferences in the upcoming year. These venues include:

Conference	Date	Location
IHS	3/20-3/24	Houston, Texas (US)
AICHE	3/26-3/30	San Antonio, Texas (US)
IRPC 2017	4/17-4/20	Delhi, India
ACS Green Chemistry	6/13-6/15	Reston, Virginia (US)
IRPC Americas	7/18-7/19	Houston, Texas (US)

Contact Information

If you have any questions or are interested in investigating Optiperm™ for use at your facility, please do not hesitate to call:

William Charlton
VP Olefins
bcharlton@compactmembrane.com
302-999-7996 ext.17

Hannah Murnen
VP Business Development
hmurnen@compactmembrane.com
302-999-7996 ext.37

Sudip Majumdar
Chief Technology Officer
smajumdar@compactmembrane.com
302-999-7996 ext.29